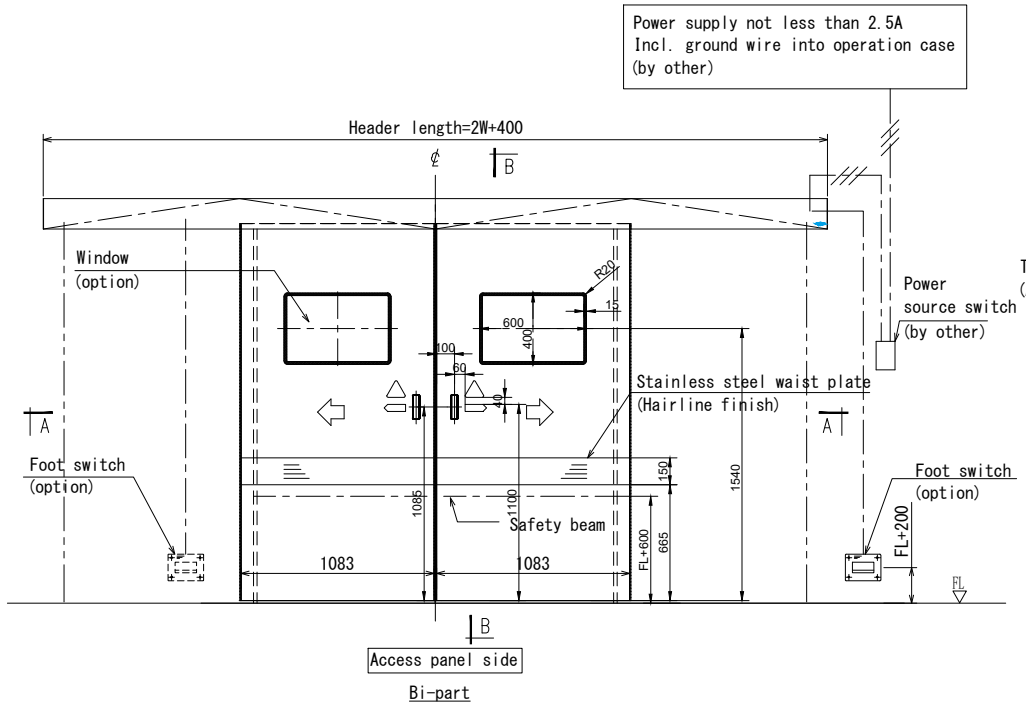

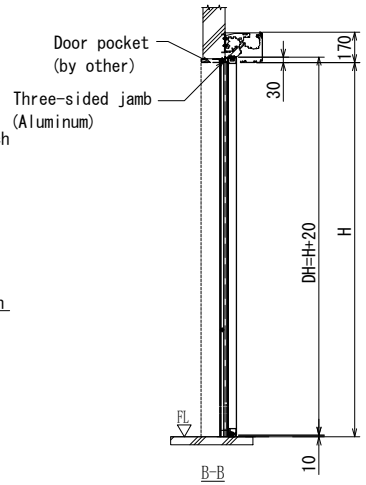

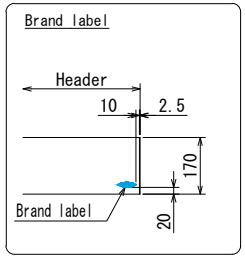

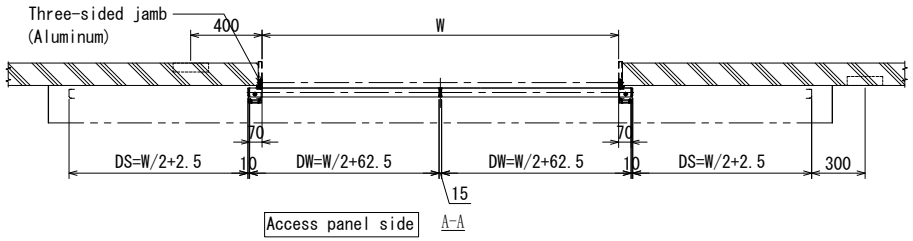

Scope: Maximum weight of door : 150Kg×2

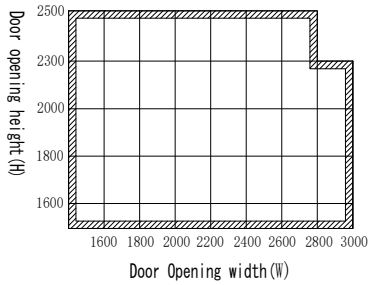

Remark:It need to adjust the height of waist plate ,when opening height is over 2200mm.

Specification

Item	Standard	Option
Door leaf	Steel(painting)	Aluminum(painting)
Header	Aluminum/Silver	Painting
Three-sided jamb	Aluminum/Silver	Painting
Operator	VS-150	-
Safety beam	NP-01	NP-80
Foot switch	Ft-80	Option
Handle	Recessed handle	Option
Electric lock	-	Option

NAME	NAX-SN-D
	NAX Hermetic Door